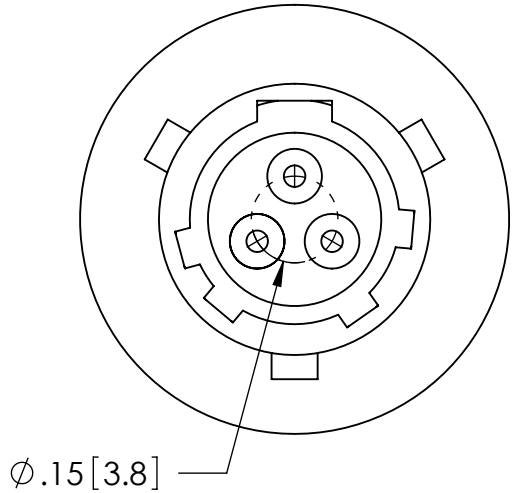


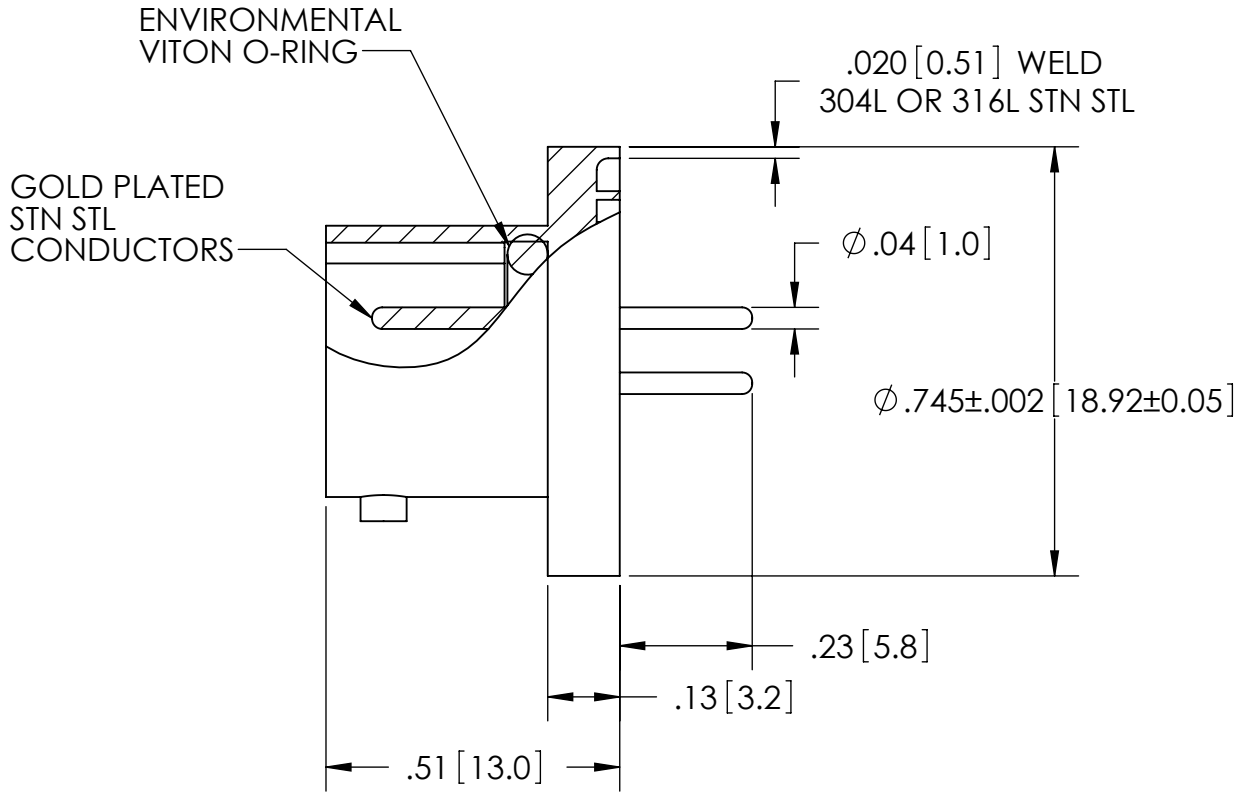


PLUGS SOLD SEPARATELY:
-AIR SIDE W/ SOLDER CONTACTS FP18062
-AIR SIDE W/CRIMP CONTACTS KT18063

| RATINGS | |
|---|---|
| VOLTAGE: | 1KV DC |
| CURRENT: | 5 AMPS |
| PRESSURE: | 550 PSIG @ 20°C |
| TEMPERATURE: | -269° TO 450°C |

**WWW.SOLIDSEALING.COM**

PROPRIETARY AND CONFIDENTIAL
THE INFORMATION CONTAINED IN THIS DRAWING IS THE SOLE PROPERTY OF SOLID SEALING TECHNOLOGY. ANY REPRODUCTION IN PART OR AS A WHOLE WITHOUT THE WRITTEN PERMISSION OF SOLID SEALING TECHNOLOGY IS PROHIBITED.

THIRD ANGLE PROJECTION

TITLE: 3 PIN CONNECTOR

PART NO. FA16820 REV. B

| REV. | APP'D | DATE | SCALE 3:1 | DIMENSIONS IN INCHES [mm] | DRAWN | MH | 02/04/2008 |
|---|---|---|---|---|---|---|---|
| B1 | JF | 11/11/2016 | MPCL0163-11SL | | ENG APPR. | MH | 02/05/2008 |

SOLID SEALING TECHNOLOGY, INC.

SALES DWG NO. FA16820SL REV. B1

***DIMENSIONS ARE FOR REFERENCE ONLY. UNLESS NOTED, NO TOLERANCES ARE IMPLIED. CONSULT SST TO DISCUSS YOUR SPECIFIC REQUIREMENTS.***

# 3 PINS

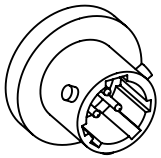

SINGLE ENDED FEEDTHROUGH: FA16820

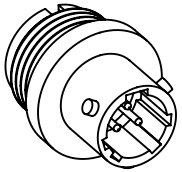

DOUBLE ENDED FEEDTHROUGH: FA16822

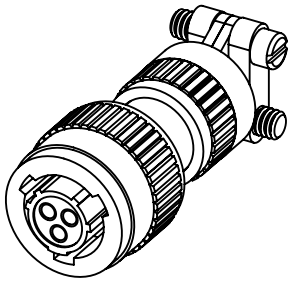

AIR SIDE PLUG (CRIMP): KT18063
AIR SIDE PLUG (SOLDER): FP18062

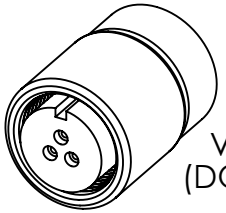

VACUUM SIDE PLUG (DOUBLE ENDED ONLY): FA18064

# 6 PINS

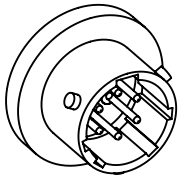

SINGLE ENDED FEEDTHROUGH: FA16808

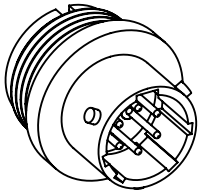

DOUBLE ENDED FEEDTHROUGH: FA16809*

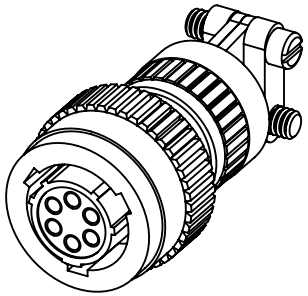

AIR SIDE PLUG (CRIMP): KT18065*
AIR SIDE PLUG (SOLDER): FP18066

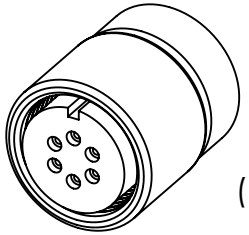

VACUUM SIDE PLUG (DOUBLE ENDED ONLY): FA18067*

*THERMOCOUPLE TYPE K OPTION AVAILABLE

# 10 PINS

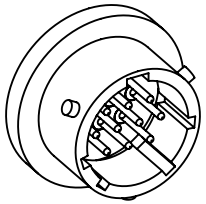

SINGLE ENDED FEEDTHROUGH: FA13003

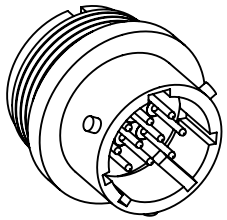

DOUBLE ENDED FEEDTHROUGH: FA12933*

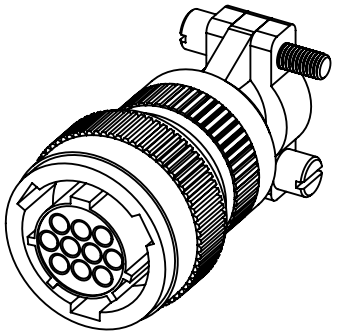

AIR SIDE PLUG (CRIMP): KT14378*
AIR SIDE PLUG (SOLDER): FP14900

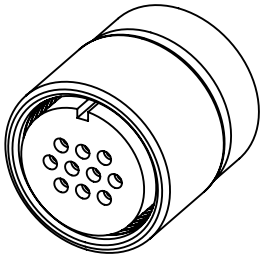

VACUUM SIDE PLUG (DOUBLE ENDED ONLY): FA13461*

PROPRIETARY AND CONFIDENTIAL
THE INFORMATION CONTAINED IN THIS DRAWING IS THE SOLE PROPERTY OF SOLID SEALING TECHNOLOGY. ANY REPRODUCTION IN PART OR AS A WHOLE WITHOUT THE WRITTEN PERMISSION OF SOLID SEALING TECHNOLOGY IS PROHIBITED.

THIRD ANGLE PROJECTION

TITLE
26482 SERIES FAMILY

SOLID SEALING TECHNOLOGY

| REV. | APP'D | DATE | SCALE 1:1 | DIMENSIONS IN INCHES [mm] | DRAWN | CW | 8/19/2021 |
|---|---|---|---|---|---|---|---|
| A1 | CW | 1/27/2022 | MPCL0163-11 | | ENG APPR. | JF | 1/27/2022 |

REV: A1

WWW.SOLIDSEALING.COM

SALES DWG NO. 26482_SERIES REV. A1

***DIMENSIONS ARE FOR REFERENCE ONLY. UNLESS NOTED, NO TOLERANCES ARE IMPLIED. CONSULT SST TO DISCUSS YOUR SPECIFIC REQUIREMENTS.***

# 19 PINS

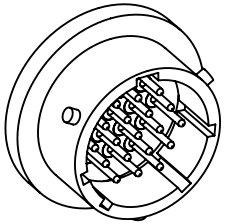

SINGLE ENDED FEEDTHROUGH: FA13002

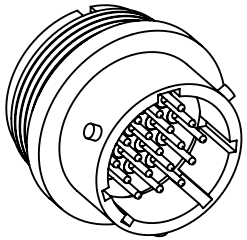

DOUBLE ENDED FEEDTHROUGH: FA12932*

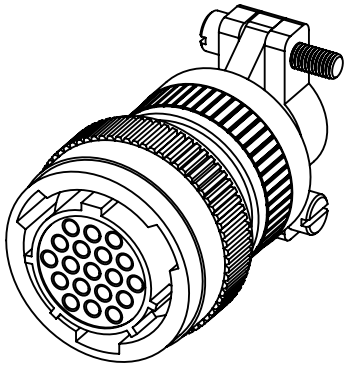

AIR SIDE PLUG (CRIMP): KT14379*
AIR SIDE PLUG (SOLDER): FP14901

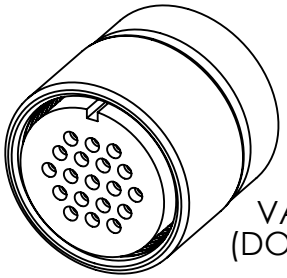

VACUUM SIDE PLUG (DOUBLE ENDED ONLY): FA13462*

# 32 PINS

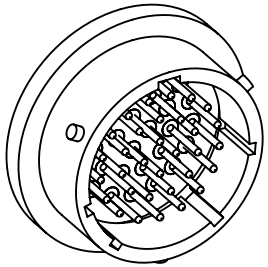

SINGLE ENDED FEEDTHROUGH: FA13001

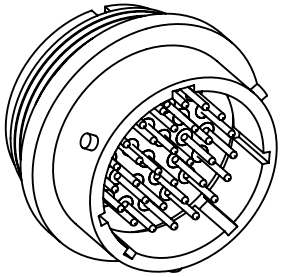

DOUBLE ENDED FEEDTHROUGH: FA12931*

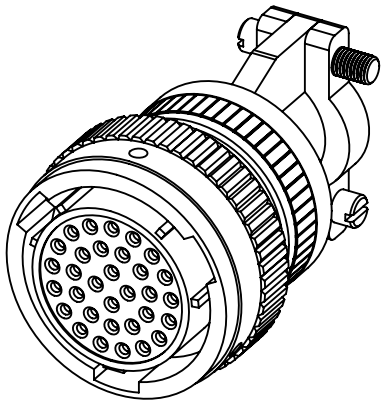

AIR SIDE PLUG (CRIMP): KT14380*
AIR SIDE PLUG (SOLDER): FP14902

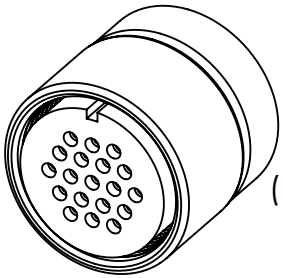

VACUUM SIDE PLUG (DOUBLE ENDED ONLY): FA13463*

*THERMOCOUPLE TYPE K OPTION AVAILABLE

# 41 PINS

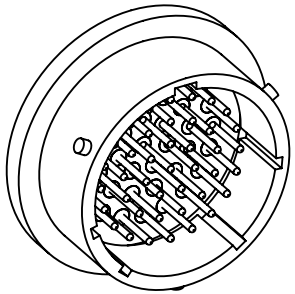

SINGLE ENDED FEEDTHROUGH: FA12998

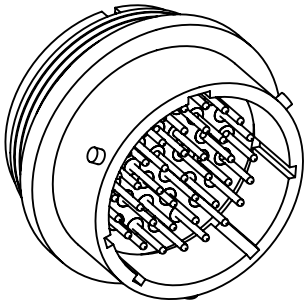

DOUBLE ENDED FEEDTHROUGH: FA12930

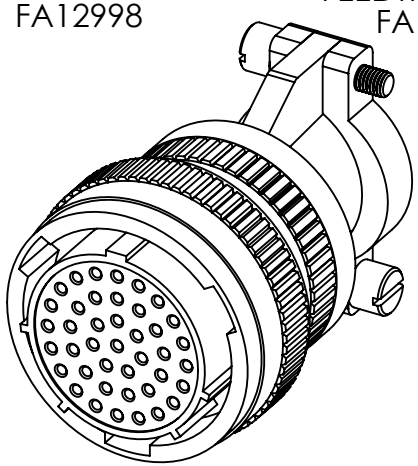

AIR SIDE PLUG (CRIMP): KT14381
AIR SIDE PLUG (SOLDER): FP14903

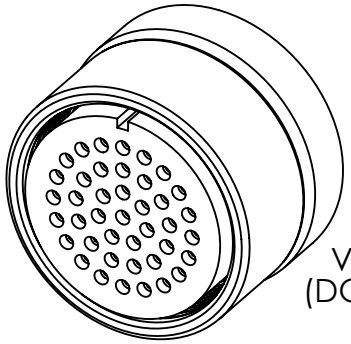

VACUUM SIDE PLUG (DOUBLE ENDED ONLY): FA13464

PROPRIETARY AND CONFIDENTIAL

THE INFORMATION CONTAINED IN THIS DRAWING IS THE SOLE PROPERTY OF SOLID SEALING TECHNOLOGY. ANY REPRODUCTION IN PART OR AS A WHOLE WITHOUT THE WRITTEN PERMISSION OF SOLID SEALING TECHNOLOGY IS PROHIBITED.

THIRD ANGLE PROJECTION

TITLE

26482 SERIES FAMILY

SOLID SEALING TECHNOLOGY

| REV. | APP'D | DATE | SCALE 1:1 | DIMENSIONS IN INCHES [mm] | DRAWN | CW | 8/19/2021 |
|---|---|---|---|---|---|---|---|
| A1 | CW | 1/27/2022 | MPCL0054-02 | | ENG APPR. | JF | 1/27/2022 |

REV: A1

WWW.SOLIDSEALING.COM

SALES DWG NO. 26482_SERIES REV. A1

***DIMENSIONS ARE FOR REFERENCE ONLY. UNLESS NOTED, NO TOLERANCES ARE IMPLIED. CONSULT SST TO DISCUSS YOUR SPECIFIC REQUIREMENTS.***

# CONTACTS/WIRE

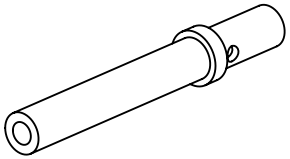

CRIMP CONTACTS
KT13353 (COPPER ALLOY)
KT13353-02 (CHROMEL)**
KT13353-03 (ALUMEL)**
KT13353-11 (COPPER ALLOY,
NO COLOR BANDS)

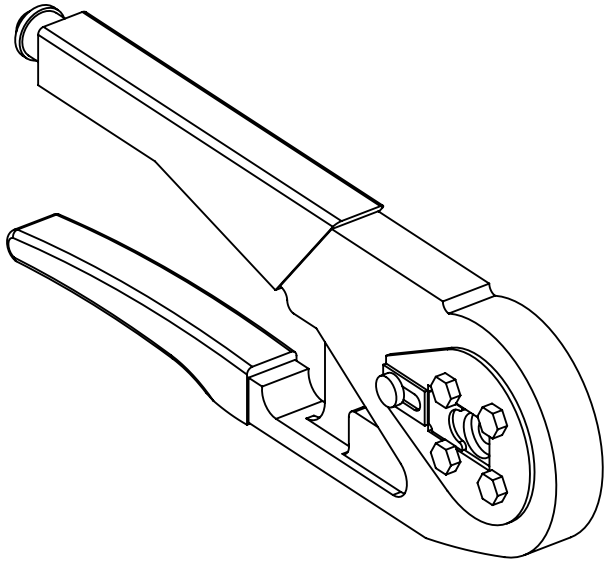

CRIMP TOOL
FP13347

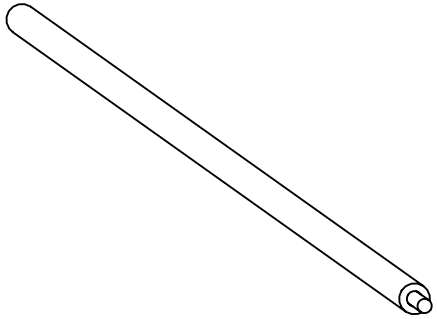

22 AWG WIRE
KAPTON
(CUSTOM LENGTH AVAILABLE)
FA15065

**THERMOCOUPLE TYPE K CRIMP CONTACTS

PROPRIETARY AND CONFIDENTIAL
THE INFORMATION CONTAINED IN THIS DRAWING IS THE SOLE PROPERTY OF SOLID SEALING TECHNOLOGY. ANY REPRODUCTION IN PART OR AS A WHOLE WITHOUT THE WRITTEN PERMISSION OF SOLID SEALING TECHNOLOGY IS PROHIBITED.

THIRD ANGLE PROJECTION

TITLE
26482 SERIES FAMILY

SOLID SEALING TECHNOLOGY

| REV. | APP'D | DATE | SCALE 1:1 | DIMENSIONS IN INCHES [mm] | DRAWN | CW | 8/19/2021 | REV: A1 | WWW.SOLIDSEALING.COM |
|---|---|---|---|---|---|---|---|---|---|
| A1 | CW | 1/27/2022 | ACDCN010-1ST | | ENG APPR. | JF | 1/27/2022 | | SALES DWG NO. 26482_SERIES REV. A1 |

***DIMENSIONS ARE FOR REFERENCE ONLY. UNLESS NOTED, NO TOLERANCES ARE IMPLIED. CONSULT SST TO DISCUSS YOUR SPECIFIC REQUIREMENTS.***