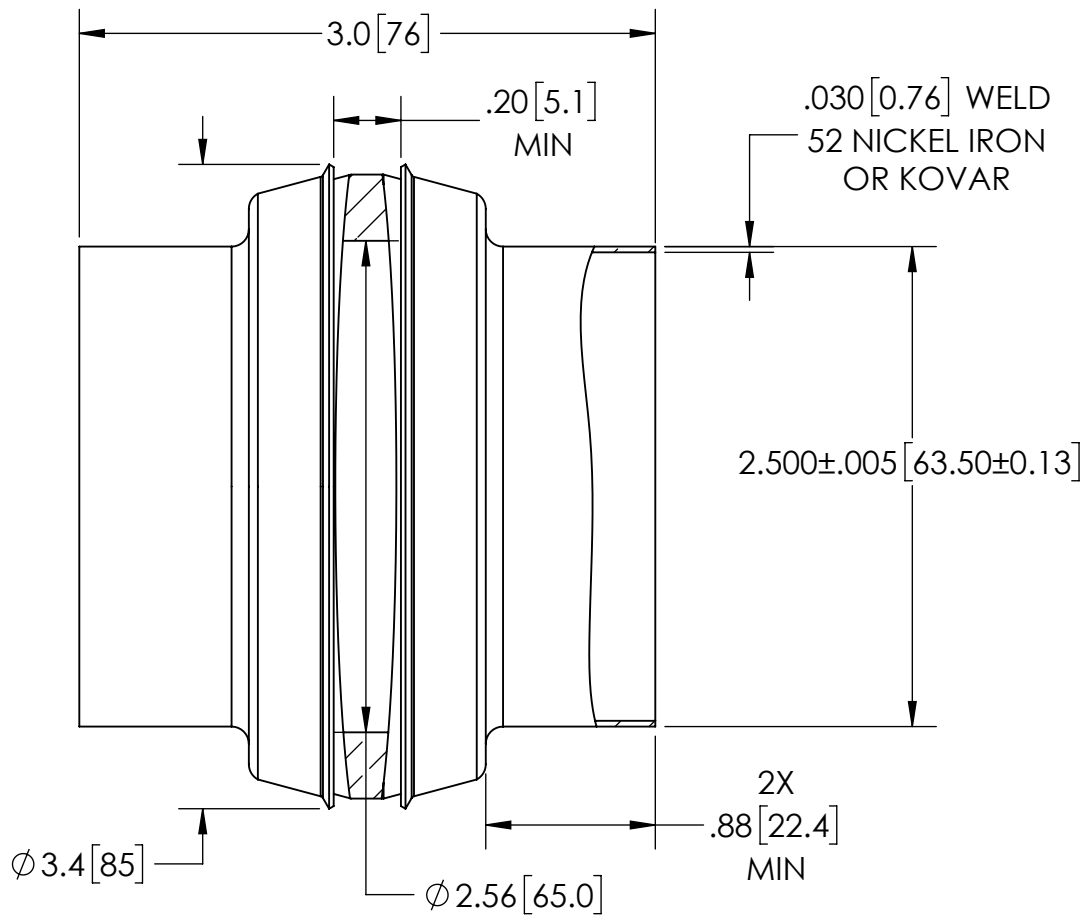

PERFORMANCE SPECIFICATIONS	
VOLTAGE:	5KV DC
PRESSURE:	80 PSIG @ 20°C
TEMPERATURE:	-269°C TO 450°C

PROPRIETARY AND CONFIDENTIAL
THE INFORMATION CONTAINED IN THIS DRAWING IS THE SOLE PROPERTY OF SOLID SEALING TECHNOLOGY. ANY REPRODUCTION IN PART OR AS A WHOLE WITHOUT THE WRITTEN PERMISSION OF SOLID SEALING TECHNOLOGY IS PROHIBITED.

THIRD ANGLE PROJECTION

TITLE
VACUUM ISOLATOR

SOLID SEALING TECHNOLOGY

REV.	APP'D	DATE	SCALE 1:1	DIMENSIONS IN INCHES [mm]	DRAWN	CW	1/20/2022	PART NO. FA23696 REV. B	WWW.SOLIDSEALING.COM
B1	CW	1/20/2022	BRCL0002-13		ENG APPR.	MH	1/20/2022		SALES DWG NO. FA23696SL REV. B1

DIMENSIONS ARE FOR REFERENCE ONLY. UNLESS NOTED, NO TOLERANCES ARE IMPLIED. CONSULT SST TO DISCUSS YOUR SPECIFIC REQUIREMENTS.