NOTES:
1- FOR USE WITH SST CRIMP TOOL FP52705.

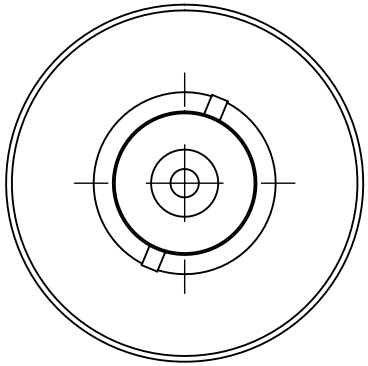

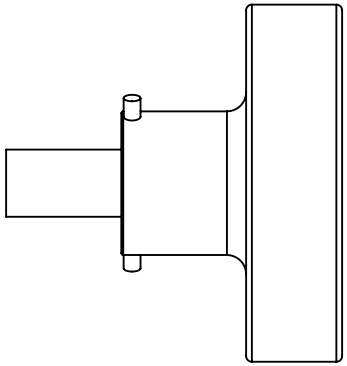

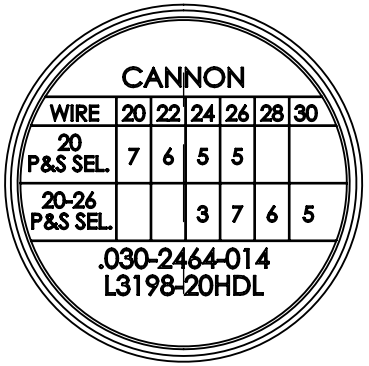

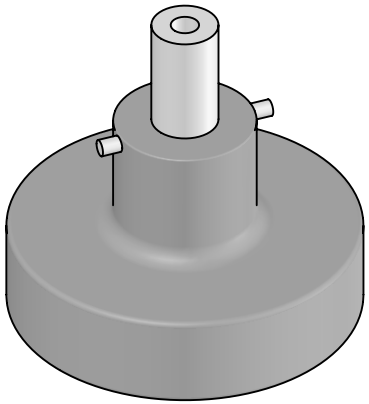

PROPRIETARY AND CONFIDENTIAL
THE INFORMATION CONTAINED IN THIS DRAWING IS THE SOLE PROPERTY OF SOLID SEALING TECHNOLOGY. ANY REPRODUCTION IN PART OR AS A WHOLE WITHOUT THE WRITTEN PERMISSION OF SOLID SEALING TECHNOLOGY IS PROHIBITED.

THIRD ANGLE PROJECTION

TITLE

POSITIONER

SOLID SEALING TECHNOLOGY

REV.	APP'D	DATE	SCALE 2:1	DIMENSIONS IN INCHES [mm]	DRAWN	ET	10/8/2026
A	ET	10/8/2026	FP32470-13		ENG APPR.	ET	10/8/2026

PART NO. FP52707 REV. A

WWW.SOLIDSEALING.COM

SALES DWG NO. FP52707SL REV. A

DIMENSIONS ARE FOR REFERENCE ONLY. UNLESS NOTED, NO TOLERANCES ARE IMPLIED. CONSULT SST TO DISCUSS YOUR SPECIFIC REQUIREMENTS.