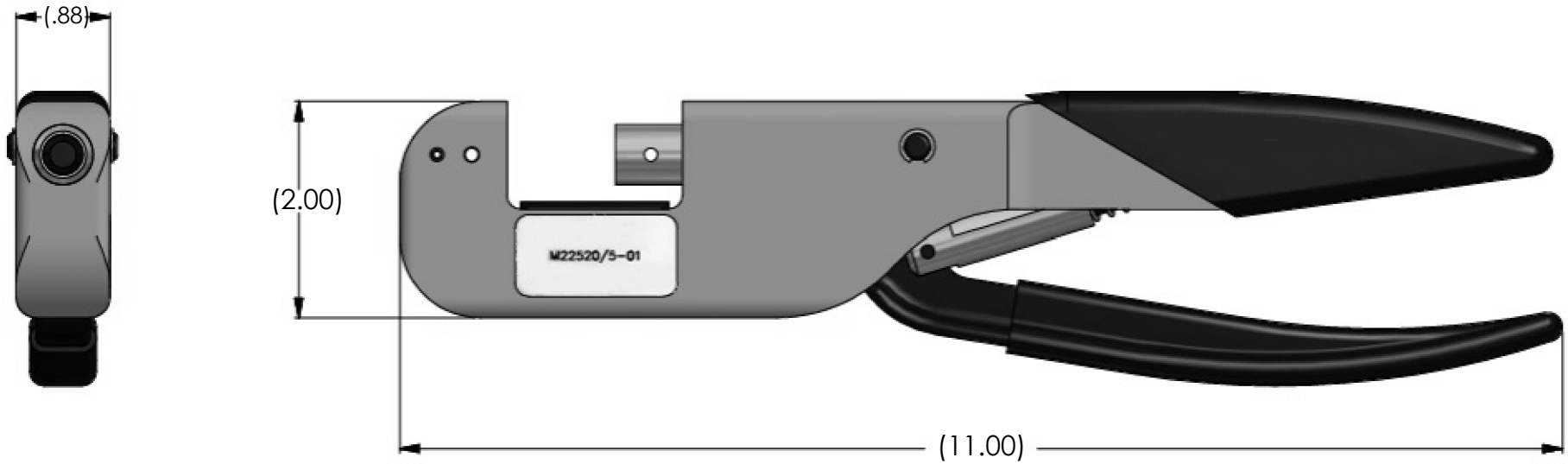

PROPRIETARY AND CONFIDENTIAL

THE INFORMATION CONTAINED IN THIS DRAWING IS THE SOLE PROPERTY OF SOLID SEALING TECHNOLOGY. ANY REPRODUCTION IN PART OR AS A WHOLE WITHOUT THE WRITTEN PERMISSION OF SOLID SEALING TECHNOLOGY IS PROHIBITED.

THIRD ANGLE PROJECTION

TITLE

CRIMP TOOL

SOLID SEALING TECHNOLOGY

REV.	APP'D	DATE	SCALE 1:4	DIMENSIONS IN INCHES [mm]	DRAWN	CH	4/28/2026
A	ET	10/8/2026	FP13347-19		ENG APPR.	ET	10/8/2026

PART NO. FP52731 REV. A

WWW.SOLIDSEALING.COM

SALES DWG NO. FP52731SL REV. A

DIMENSIONS ARE FOR REFERENCE ONLY. UNLESS NOTED, NO TOLERANCES ARE IMPLIED. CONSULT SST TO DISCUSS YOUR SPECIFIC REQUIREMENTS.