USED WITH SST P/N FP52731

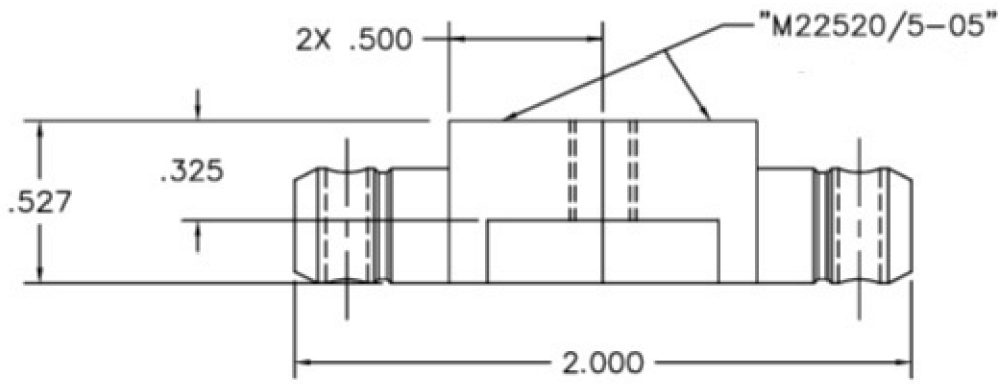

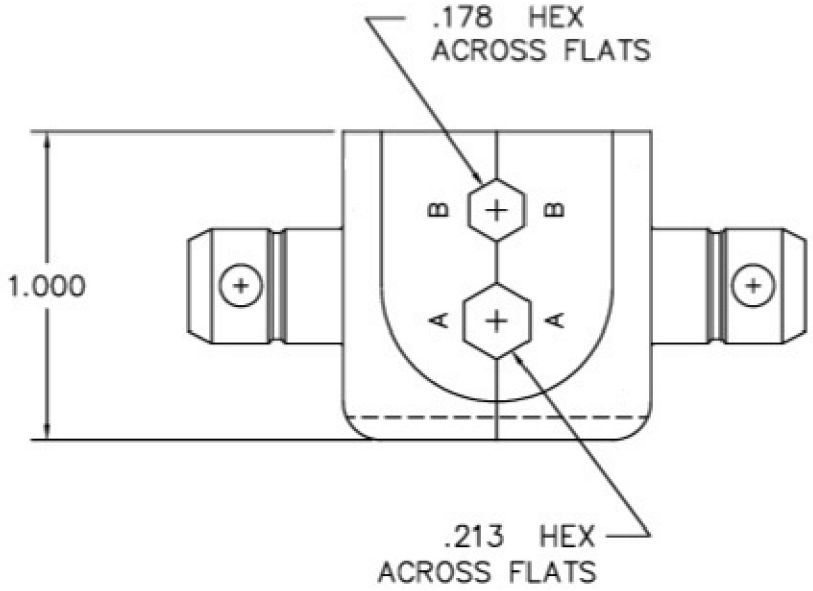

PROPRIETARY AND CONFIDENTIAL
THE INFORMATION CONTAINED IN THIS DRAWING IS THE SOLE PROPERTY OF SOLID SEALING TECHNOLOGY. ANY REPRODUCTION IN PART OR AS A WHOLE WITHOUT THE WRITTEN PERMISSION OF SOLID SEALING TECHNOLOGY IS PROHIBITED.

THIRD ANGLE PROJECTION

TITLE

HEX CRIMP TOOL

SOLID SEALING TECHNOLOGY

REV.	APP'D	DATE	SCALE 1:1	DIMENSIONS IN INCHES [mm]	DRAWN	ET	10/8/2026
A	ET	10/8/2026	-		ENG APPR.	ET	10/8/2026

PART NO. FP53459 REV. A

WWW.SOLIDSEALING.COM

SALES DWG NO. FP53459SL REV. A

DIMENSIONS ARE FOR REFERENCE ONLY. UNLESS NOTED, NO TOLERANCES ARE IMPLIED. CONSULT SST TO DISCUSS YOUR SPECIFIC REQUIREMENTS.